1) Design a low pass filter with a cut off frequency of 1kHz and a pass band gain of 2.

Ans: $f = 1kHz$, $A_o = 2$

$$f_h = \frac{1}{2\pi RC}$$

$$RC = \frac{1}{2\pi f_h}, = \frac{10^{-3}}{2\pi}$$

$$RC = 1.6 \times 10^{-4}$$

Let $R = 1.6k\Omega$

$$C = \frac{1.6 \times 10^{-4}}{1.6 \times 10^{3}}$$

$$C = 1 \times 10^{-7}$$

$$C = 0.1\mu F$$

$$A_o = 1 + \frac{R_f}{R}$$

$$\frac{R_f}{R_1} = A_o - 1 = 2 - 1 = 1$$

$$R_f = R_1$$

$$R_1 = 10k\Omega$$

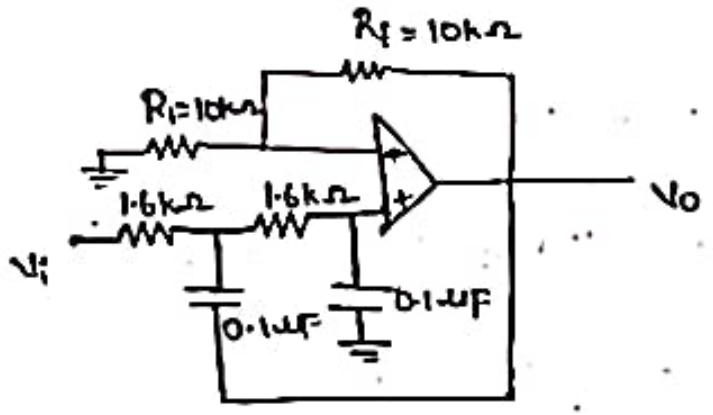

2) Briefly explain the second order High pass filter with neat circuit Diagram

A) At node A

$(V_A - V_i)Y_1 +$

$(V_A - V_o)Y_3 +$

$(V_A - V_B)Y_2 = 0$

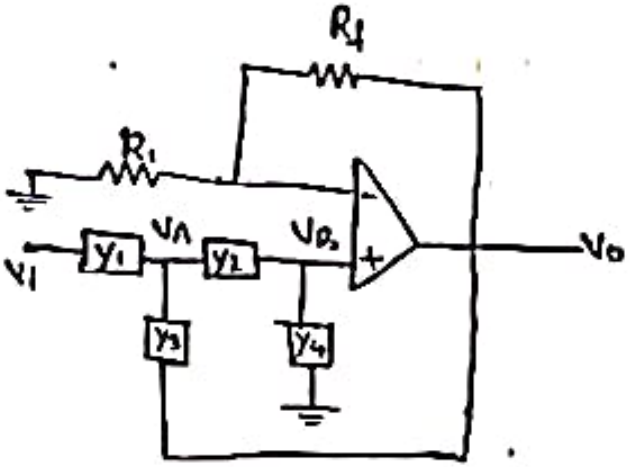

$V_i Y_1 = V_A(Y_1+Y_2+Y_3) - V_B Y_2 - V_o Y_3$

$V_i Y_1 = V_A(Y_1+Y_2+Y_3) - \frac{V_o}{A_o} Y_2 - V_o Y_3$

KCL at node 'B':

$(V_B - V_A)Y_2 + V_B Y_4 = 0$

$V_B(Y_2+Y_4) = V_A Y_2$

$V_A = \frac{V_B(Y_2+Y_4)}{Y_2}$

$V_A = \frac{V_o(Y_2+Y_4)}{A_o Y_2}$.

$V_i Y_1 = \frac{V_o}{A_o Y_2}(Y_2+Y_4)(Y_1+Y_2+Y_3) - \frac{V_o}{A_o} Y_2 - V_o Y_3$

$V_i Y_1 A_o Y_2 = V_o(Y_2+Y_4)(Y_1+Y_2+Y_3) - V_o Y_2^2 - V_o Y_2 Y_3$

$V_i Y_1 A_o Y_2 = V_o[(Y_2+Y_4)(Y_1+Y_2+Y_3) - Y_2^2 - A_o Y_2 Y_3]$

$V_i A_o Y_1 Y_2 = V_o[Y_1Y_2 + Y_2^2 + Y_2Y_3 + Y_4(Y_1+Y_2+Y_3) - Y_2^2 - A_o Y_2 Y_3]$

$$V_i A_o Y_1 Y_2 = V_o \left[Y_1 Y_2 + Y_2 Y_3 (1 - A_o) + Y_4 (Y_1 + Y_2 + Y_3) \right]$$

$$\frac{V_o}{V_i} = \frac{A_o Y_1 Y_2}{Y_1 Y_2 + Y_2 Y_3 (1 - A_o) + Y_4 (Y_1 + Y_2 + Y_3)}$$

$$H(s) = \frac{V_o}{V_i} = \frac{A_o Y_1 Y_2}{Y_1 Y_2 + Y_2 Y_3 (1 - A_o) + Y_4 (Y_1 + Y_2 + Y_3)}$$

Let $Y_1 = Y_2 = sC$

$Y_3 = Y_4 = \frac{1}{R}$

$$\frac{V_o}{V_i} = \frac{A_o Y_1 Y_2}{Y_1 Y_2 + Y_2 Y_3 (1 - A_o) + Y_4 (Y_1 + Y_2 + Y_3)}$$

$$\frac{V_o}{V_i} = \frac{A_o s^2 C^2}{s^2 C^2 + \frac{sC}{R}(1 - A_o) + \frac{1}{R}\left(sC + sC + \frac{1}{R}\right)}$$

$$= \frac{A_o s^2 C^2}{s^2 C^2 + \frac{sC}{R}(1 - A_o) + \frac{1}{R}\left(2sC + \frac{1}{R}\right)}$$

$$= \frac{A_o s^2 C^2}{s^2 C^2 + \frac{sC}{R}(1 - A_o) + \frac{1}{R}\left(\frac{2sCR + 1}{R}\right)}$$

$$= \frac{A_o s^2 C^2}{s^2 C^2 + \frac{sC}{R} - \frac{sCA_o}{R} + \frac{2sCR + 1}{R^2}}$$

$$= \frac{A_o s^2 C^2}{s^2 C^2 + \frac{2sC}{R} - \frac{sCA_o}{R} + \frac{1}{R}}$$

$$= \frac{A_0 s^2 C^2}{s^2C^2 + \frac{sC}{R}(3-A_0) + \frac{1}{R}}$$

$$= \frac{A_0 s^2 C^2}{C^2\left[s^2 + \frac{s}{RC}(3-A_0) + \frac{1}{RC^2}\right]}$$

$$= \frac{A_0 s^2}{s^2 + (3-A_0)\omega_1 s + \omega_1^2}$$

$\{\because s = j\omega,\ 3 - A_0 = \alpha = 1.414$

$$|H(j\omega)| = \left|\frac{V_0}{V_i}\right| = \frac{A_0}{\sqrt{1+(f_L/f)^4}}$$

$$\left|\frac{H(j\omega)}{A_0}\right| = \frac{1}{\sqrt{1+\left(\frac{f_L}{f}\right)^4}}$$

for the n th order :

$$\left|\frac{H(j\omega)}{A_0}\right| = \frac{1}{\sqrt{1+\left(\frac{f_L}{f}\right)^{2n}}}$$

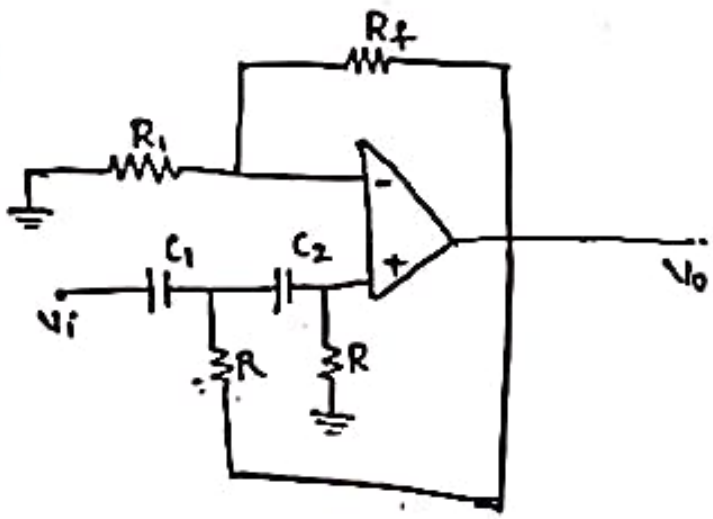

(3) Design a fourth order Butterworth low-pass filter having upper cut-off frequency 1 KHz.

(A) The upper cut-off frequency

$$f_h = 1\ KHz = \frac{1}{2\pi RC}$$

let $C = 0.1\ \mu F$,

$R = 1.6\ K\Omega$

$n = 4$, we get two damping factors namely,

$\alpha_1 = 0.765$

$\alpha_2 = 1.848$

Then the pass band gain of two quadratic factors are

$$A_{01} = 3 - \alpha_1 = 3 - 0.765 = 2.235$$

$$A_{02} = 3 - \alpha_2 = 3 - 1.848 = 1.152$$

The transfer function of fourth order low-pass Butterworth filter is

$$\frac{2.235}{s^2 + 0.765s + 1} \cdot \frac{1.152}{s^2 + 1.848s + 1}$$

Now, $A_{01} = 1 + \frac{R_{f1}}{R_{i1}} = 2.235 = (1 + 1.235)$

let $R_{f1} = 12.35\ k\Omega$ and $R_{i1} = 10\ k\Omega$, then we get $A_{01} = 2.235$

Similarly,

$$A_{02} = 1.152 = 1 + 0.152 = 1 + \frac{R_{f2}}{R_{i2}}$$

let $R_{f2} = 15.2\ k\Omega$ and $R_{i2} = 100\ k\Omega$ which gives $A_{02} = 1.152$

The ckt realization is shown

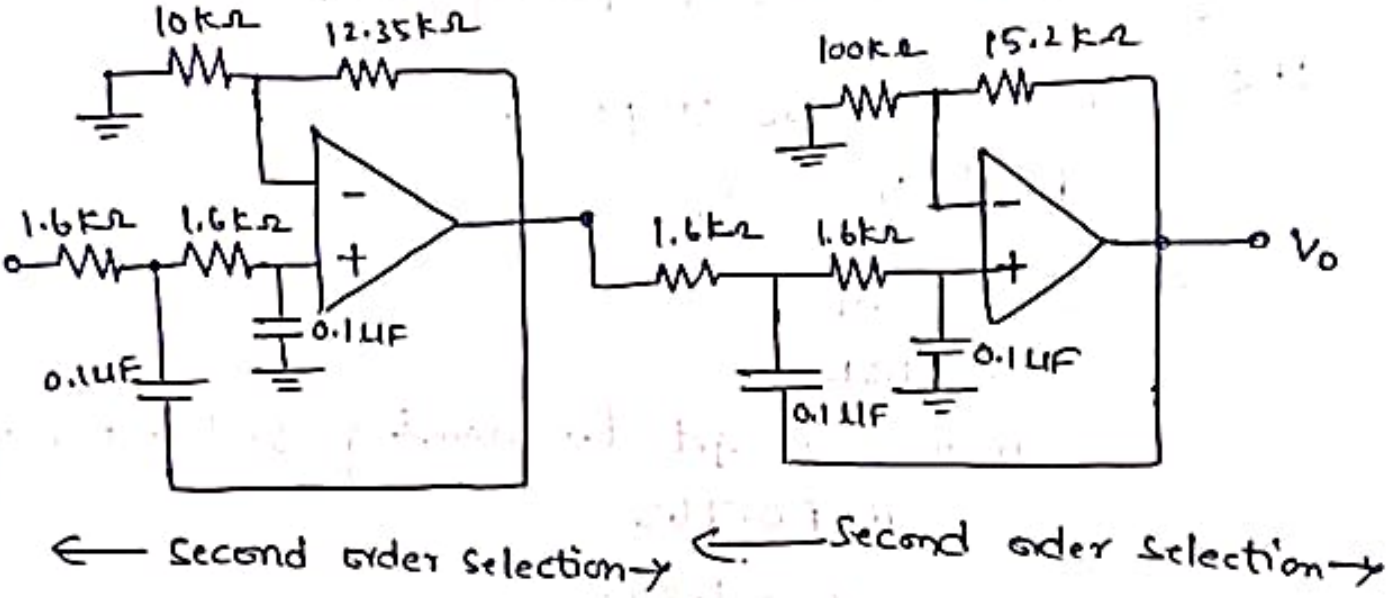

Fig:- Realization of 4th order Butterworth low-pass filter.

4) Derive the transfer function H(s) for band pass filter.

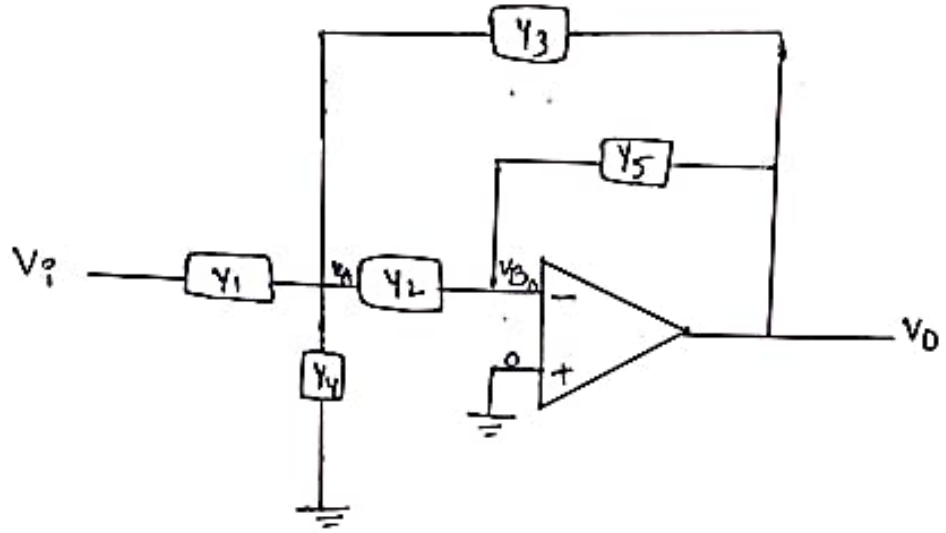

Apply KCL at node 'A'

$$(V_A - V_i)Y_1 + (V_A - 0)Y_4 + (V_A - V_B)Y_2 + (V_A - V_o)Y_3 = 0$$

$$(V_A - V_i)Y_1 + V_A Y_4 + V_A Y_2 + (V_A - V_o)Y_3 = 0$$

$$V_i Y_1 + V_o Y_3 = V_A(Y_1 + Y_2 + Y_3 + Y_4) \rightarrow (1)$$

Apply KCL at node 'B'

$$-V_A Y_2 - V_o Y_5 = 0$$

$$V_A Y_2 = -V_o Y_5$$

$$V_A = -V_o \frac{Y_5}{Y_2} \rightarrow (2)$$

& sub eq(2) in eq(1)

$$V_i Y_1 = -V_o \frac{Y_5}{Y_2}(Y_1 + Y_2 + Y_3 + Y_4) - V_o Y_3 Y_2$$

$$V_i Y_1 Y_2 = -V_o [Y_1 Y_5 + Y_2 Y_5 + Y_3 Y_5 + Y_4 Y_5 + Y_2 Y_3]$$

Let $Y_1 = G_1$, $Y_2 = sC_2$, $Y_3 = sC_3$, $Y_4 = G_4$, $Y_5 = G_5$

$$\frac{V_o}{V_i'} = \frac{-Y_1 Y_2}{Y_1 Y_5 + Y_5(Y_2+Y_3) + Y_4 Y_5 + Y_2 Y_3}$$

$$H(s) = \frac{-G_1 sC_2}{G_1 G_5 + G_5 s(C_2+C_3) + G_4 G_5 + s^2 C_2 C_3}$$

$$H(s) = \frac{-G_1}{sC_3 + G_5\frac{(C_2+C_3)}{C_2} + G_5(G_1+G_4)/sC_2}$$

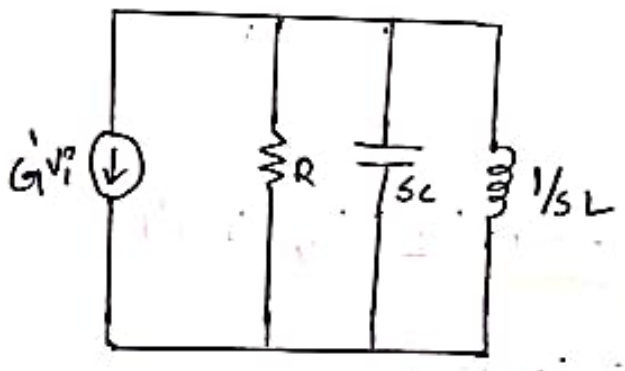

$$Y = G_1 + sC + \frac{1}{sL}$$

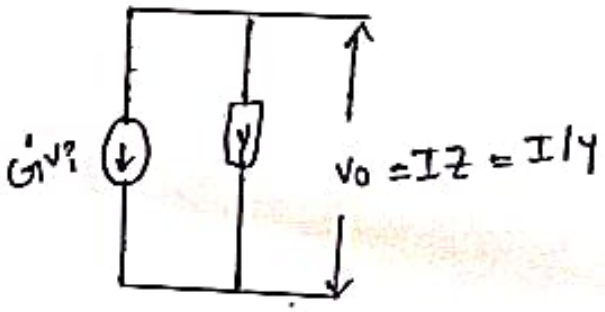

$$\frac{V}{R} = V_G = I$$

$$V_o = \frac{-G_1' v_i'}{G_1 + sC + \frac{1}{sL}}$$

$$\frac{V_o}{V_i'} = \frac{-G_1'}{G_1 + sC + \frac{1}{sL}}$$

Compare ① & ②

$G_1 = G_1'$

$G_1 = \frac{G_{15}(C_2+C_3)}{2}$

$C = C_3$

$L = \frac{C_2}{G_{15}(G_1+G_{14})}$

the actual ckt is equalent resonant ckt

$$H(s) = \frac{-G_1}{sC_3 + \frac{G_{15}}{sC_2}(G_1+G_{14}) + \frac{G_{15}(C_3+C_2)}{C_2}}$$

$$H(j\omega)\Big|_{\omega=\omega_0} = \frac{-G_1}{\frac{G_{15}(C_2+C_3)}{C_2}} = A_0$$

$$H(j\omega)\Big|_{\omega=\omega_0} = \frac{G_1 C_2}{G_{15}(C_2+C_3)} = A_0$$

(5) Draw and explain band reject filter with neat diagram ?

(A) * This filter is also called as Band-reject filter (or) band-stop (or) band elimination filter.

* The Action of the filter is exactly opposite to the band pass filter.

* This filter has two pass bands and one stop band. A band of frequencies is attenuated by this filter, hence the name band elimination filter.

* This filter is also classified as
  1. Wide band-reject filter
  2. Narrow band-reject filter.

* The Figure of merit (Q) for narrow band filter is greater than 10. In its frequency response, it shows a notch and hence, also called notch filter.

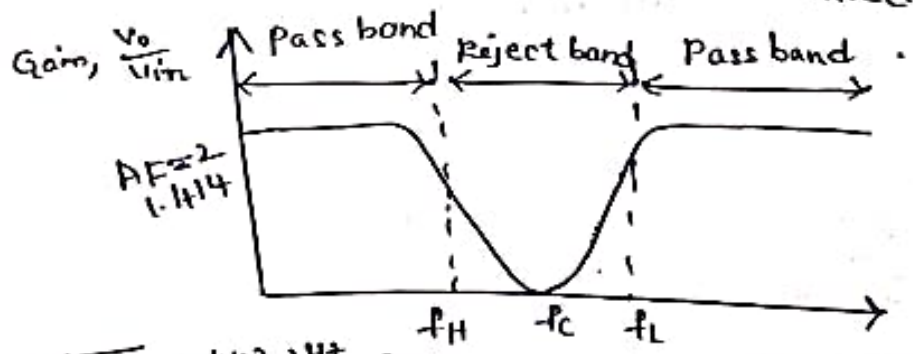

$f_c = \sqrt{f_H f_L} = 447.2\,Hz$ 200 Hz

* The bandwidth of the notch filter is very small as compared to wide band rejection filter.

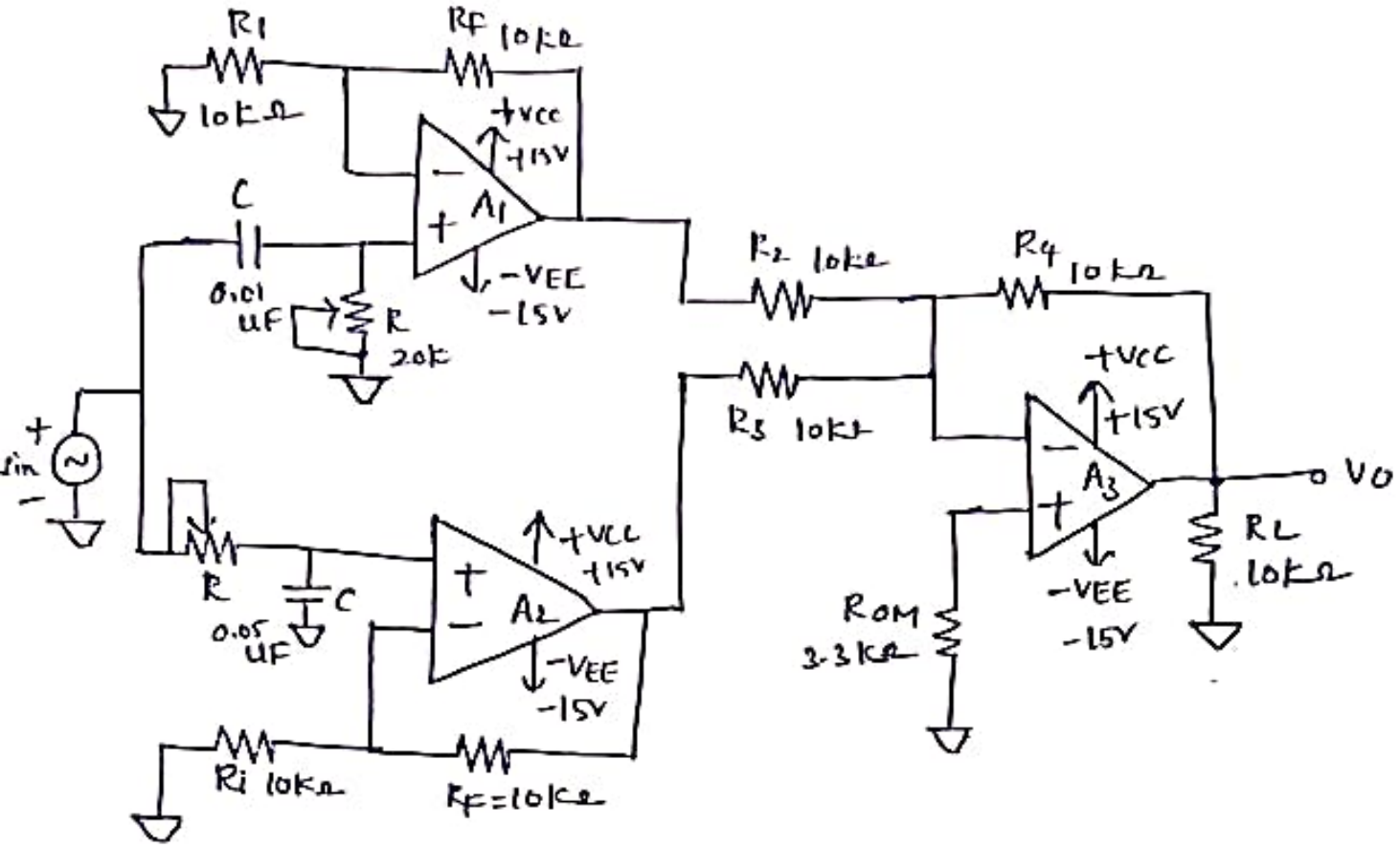

* Similar, to the wide band pass filter, this filter consists of high pass and low pass filter sections.

* To realize a band-reject response, the low cut-off frequency f_L of the high-pass filter must be larger than the high cut-off frequency f_H of the low pass filter.

6. Schmitt trigger using IC 555

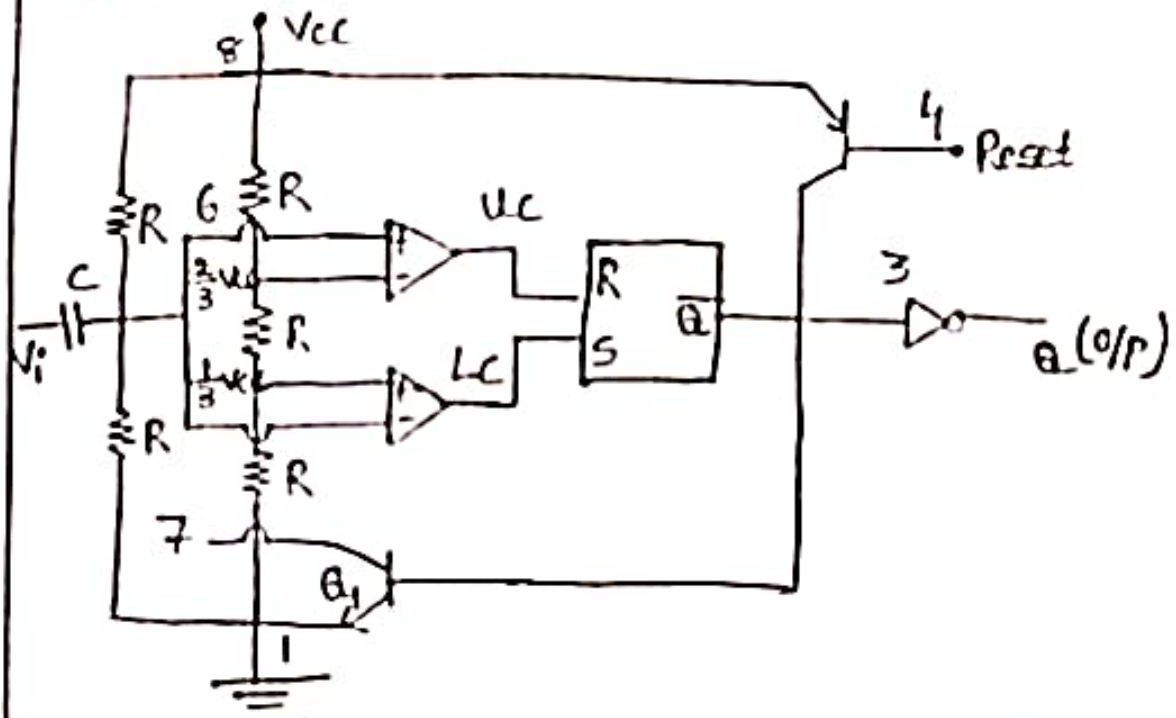

fig :- schmitt trigger using IC 555

Internal block description

The IC 555 Consists of the following internal blocks :

⇒ A voltage divider of three equal 5kΩ resistors that generate reference levels of 1/3 vcc and 2/3 vcc.

Two Comparators :

⇒ upper Comparator Compares the input with 2/3 vcc (Threshold Comparator).

⇒ Lower Comparator Compares the input with 1/3 vcc (Trigger Comparator).

⇒ A flip-flop (latch) that stores the Comparator outputs.

⇒ A transistor switch and output stage that drive the output pin.

Working principle

When the 555 is connected in schmitt trigger mode, the operation is as follows :

Case 1 : $V_{in} < \frac{1}{3} V_{CC}$

⇒ The trigger comparator becomes active and sets the flip-flop.

⇒ The output of the latch goes HIGH (logic 1)

⇒ The output pin (pin 3) also becomes HIGH.

⇒ The transistor connected to pin 7 turns OFF.

Case 2 : $V_{in} > \frac{2}{3} V_{CC}$

⇒ The threshold comparator becomes active and resets the flip-flop

⇒ The output goes LOW (logic 0).

⇒ The discharge transistor turns ON and pulls the output to ground

Case 3 : $\frac{1}{3} V_{CC} < V_{in} < \frac{2}{3} V_{CC}$

⇒ Neither comparator changes the state of the flip-flop.

⇒ The output remains in its previous state, providing hysteresis.

Hysteresis explanation :-

The difference between the two threshold voltages ($\frac{2}{3} V_{CC} - \frac{1}{3} V_{CC}$) is called hysteresis.

⇒ This hysteresis provides noise immunity and ensures clean transitions between logic levels.

Truth table :-

V_i	R	S	Q
0	0	1	1
$> \frac{1}{3} Vcc$	0	0	1
$> \frac{2}{3} Vcc$	1	0	0
$< \frac{2}{3} Vcc$	0	0	0
$< \frac{1}{3} Vcc$	0	1	1

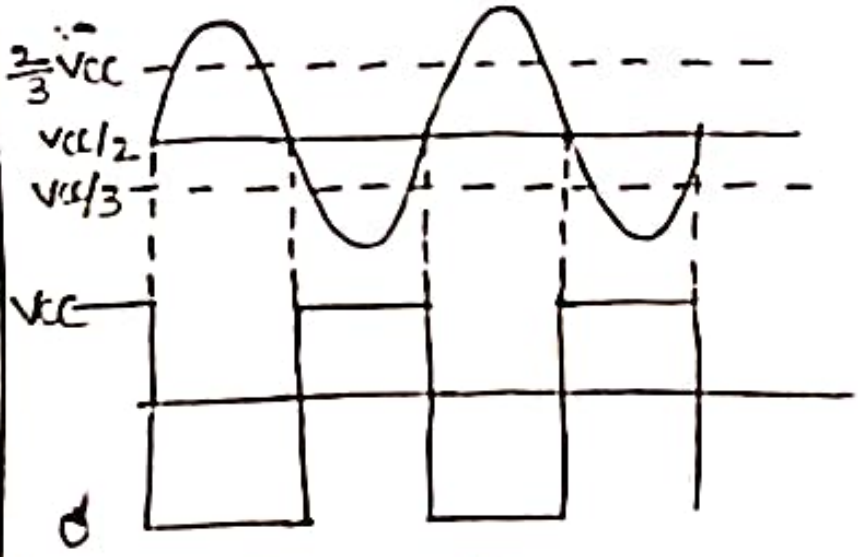

fig :- wave forms

Applications

=> wave-shapping circuits

=> square wave generators and pulse width modulators

=> pulse and level detectors

=> Noise elimination in digital circuits

=> switch debouncing circuits

=> signal conditioning for micro controller inputs.

7) Derive the expressions for gate width of 555 monostable multivibrator with diagram.

A) Monostable:-

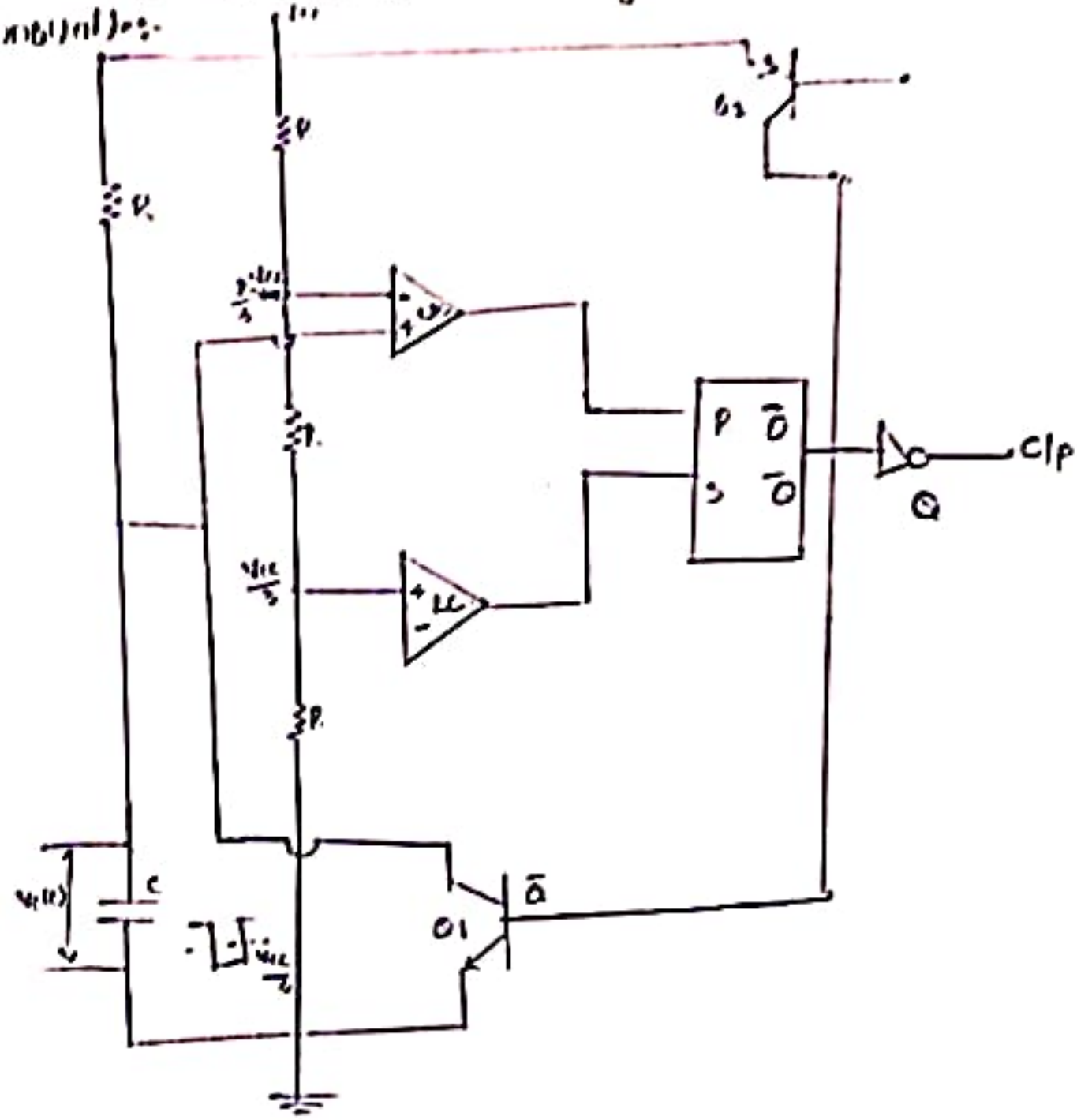

We know that

$$V_c = IV e^{-t/RC} + FV(1-e^{-t/RC}) \quad \text{—— (1)}$$

IV - Initial voltage across the capacitor

FV - Final voltage available to capacitor

RC - Time constant

$$V_c = V_{cc}\left[1-e^{-t/RC}\right] \quad \text{—— (2)}$$

Case i)

Capacitor changes from 0 to $\frac{2}{3}V_{cc}$

$$V_c(t_1) = \frac{2}{3}V_{cc}$$

from eq ①

$$\frac{2}{3}V_{cc} = V_{cc}\left[1 - e^{-t_1/RC}\right]$$

$$\frac{2}{3} = 1 - e^{-t_1/RC}$$

$$e^{-t_1/RC} = 1 - \frac{2}{3}$$

$$e^{-t_1/RC} = -0.33$$

$$-t_1/RC = -\ln(0.33)$$

$$\boxed{t_1 = 1.1RC}$$

Case ii)

Capacitor changes from 0 to $1/3\,V_{cc}$

$$V_c(t_2) = \frac{1}{3}V_{cc}$$

from eq ②

$$\frac{1}{3}V_{cc} = V_{cc}\left[1 - e^{-t_2/RC}\right]$$

$$\frac{1}{3} = 1 - e^{-t_2/RC}$$

$$e^{-t_2/RC} = 1 - \frac{1}{3}$$

$$\boxed{t_2 = 0.405RC}$$

8). Explain how 555 timer can be used as Astable multivibrator.

Ans:

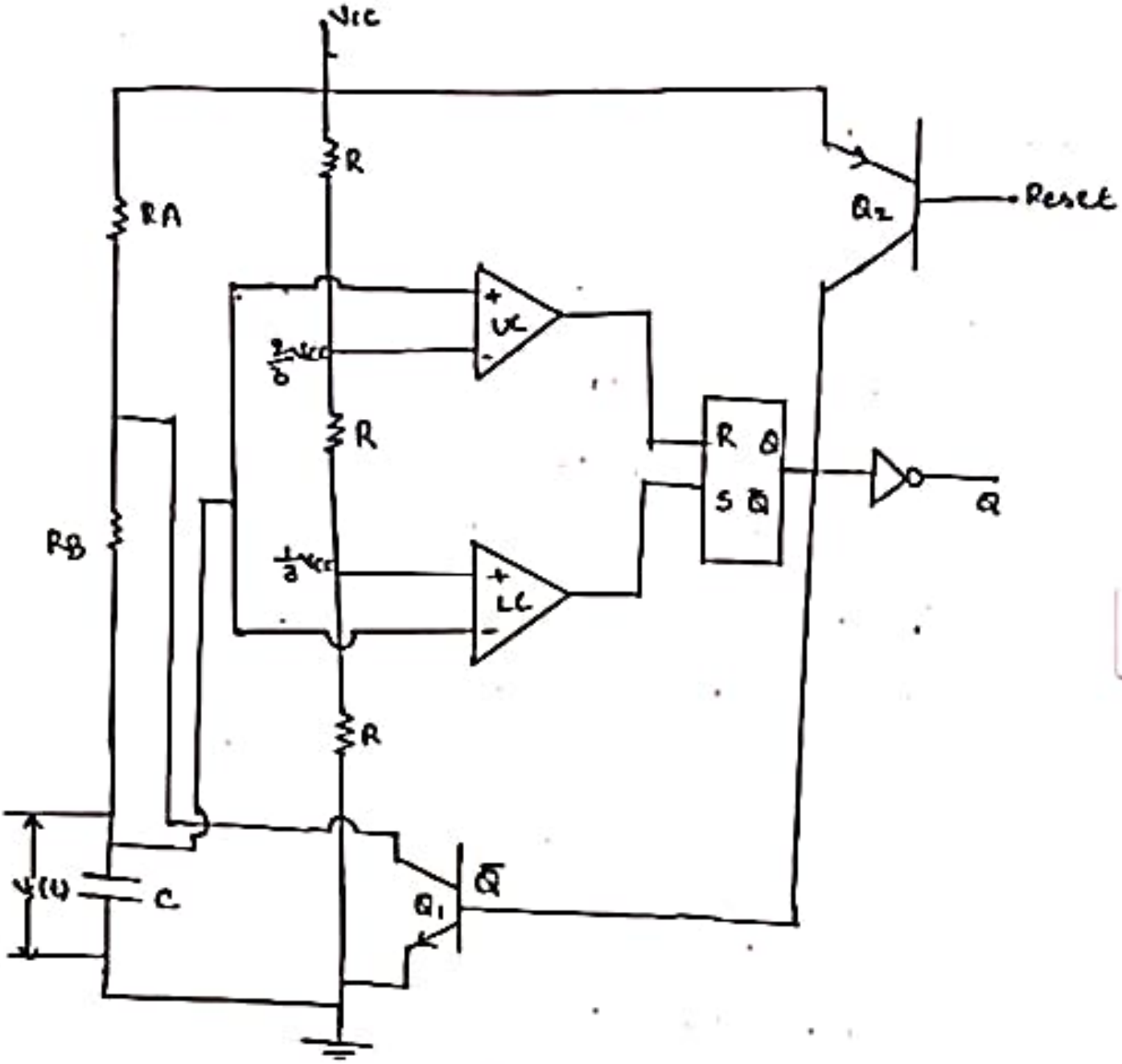

Vcc is connected, the external timing capacitor C charges towards Vcc with a time constant (RA+RB)C. During this time, output is high as reset R=0, set, S=1 and this combination makes Q̄=0 which has unclamped the timing capacitor C.

When the capacitor voltage equals $2/3 V_{cc}$ the upper comparator triggers the control flip-flop so that $\bar{Q}=1$. This, in turn, makes transistor Q_1 on and capacitor C starts discharging towards ground through R_B and transistor Q_1 with a time constant $R_B C$. Current also flows into transistor Q_1 through R_A. Resistors R_A and R_B must be large enough to limit this current and prevent damage to the discharge transistor Q_1. The minimum value of R_A is approximately equal to $V_{cc}/0.2$ where 0.2A is the maximum current through the on transistor Q_1.

During the discharge of the timing capacitor C, as it reaches $V_{cc}/3$, the lower comparator is triggered and at this stage $S=1$, $R=0$, which turns $\bar{Q}=0$. Now $\bar{Q}=0$ unclamps the external timing capacitor C. The capacitor C is thus periodically charged and discharged between $\frac{2}{3}V_{cc}$ and $\frac{1}{3}V_{cc}$ respectively. The length of time that the output remains HIGH is the time for the capacitor to charge from $1/3 V_{cc}$ to $2/3 V_{cc}$.

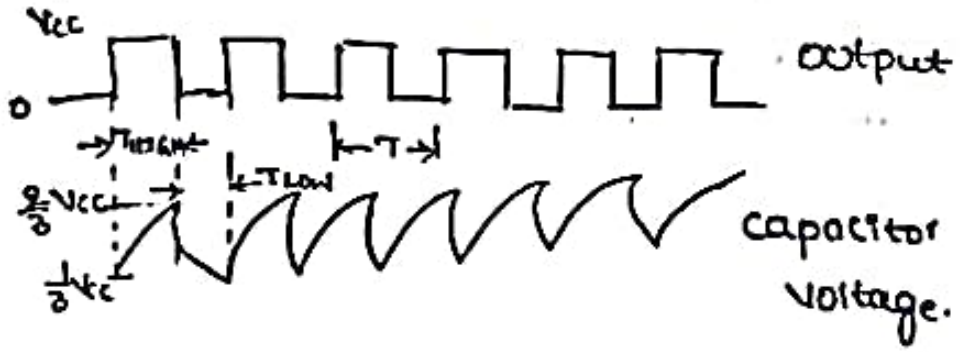

9) Draw the block diagram of VCO and explain?

Ans:- 1) A common type of VCO available in IC form is Signetics NE/SE 566.

2) A pin configuration and basic block diagram of 566 VCO are shown in below figure.

3) According to the block diagram a timing capacitor C_T is linearly charged or discharged by a constant current source/sink.

4) The amount of current can be controlled by changing the voltage V_C applied at the modulating input (pin 5) or by changing the timing resistor R_T external to IC chip.

5) The voltage at pin 6 is held at the same voltage as pin 5. Thus, if the modulating voltage at pin 5 is increased, the voltage at pin 6 also increases, resulting in less voltage across R_T and there by decreasing the charging current.

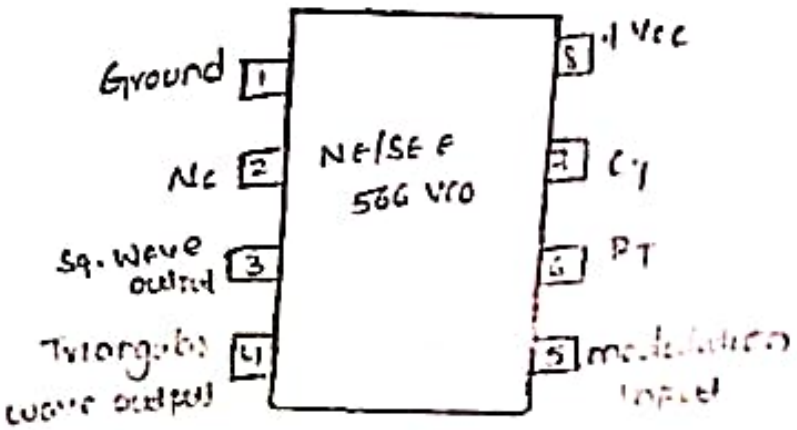

a) Block diagram

6) The voltage across the capacitor C_T is applied to the inverting input terminal of Schmitt trigger A_2 via buffer amplifier A_1.

The output voltage swing of the Schmitt trigger is designed to Vcc and 0.5 Vcc. If Ra = Rb in the positive feedback loop, the voltage at the non-inverting terminal of A_2 swings from 0.5 Vcc to 0.85 Vcc.

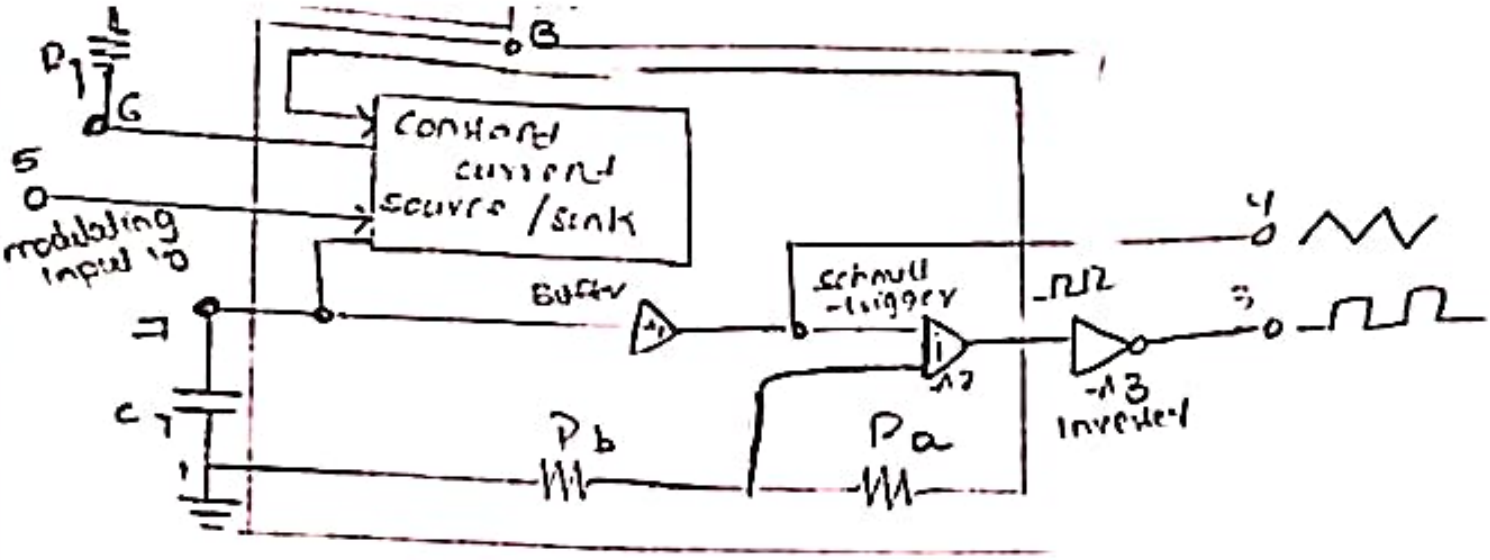

fig:- Block diagram.

9) The output frequency of the VCO can be changed either by i) R_T ii) C_T iii) the voltage Vc at the modulating input terminal pins.

9) The voltage 'Vc' can be varied by connecting a R1R2 circuit shown.

10) Vco output frequency lies in the center of the operating frequency range.

11) with no modulating input signal, if the voltage at pin 5 is biased at 7/8 Vcc. gives the VCO output.

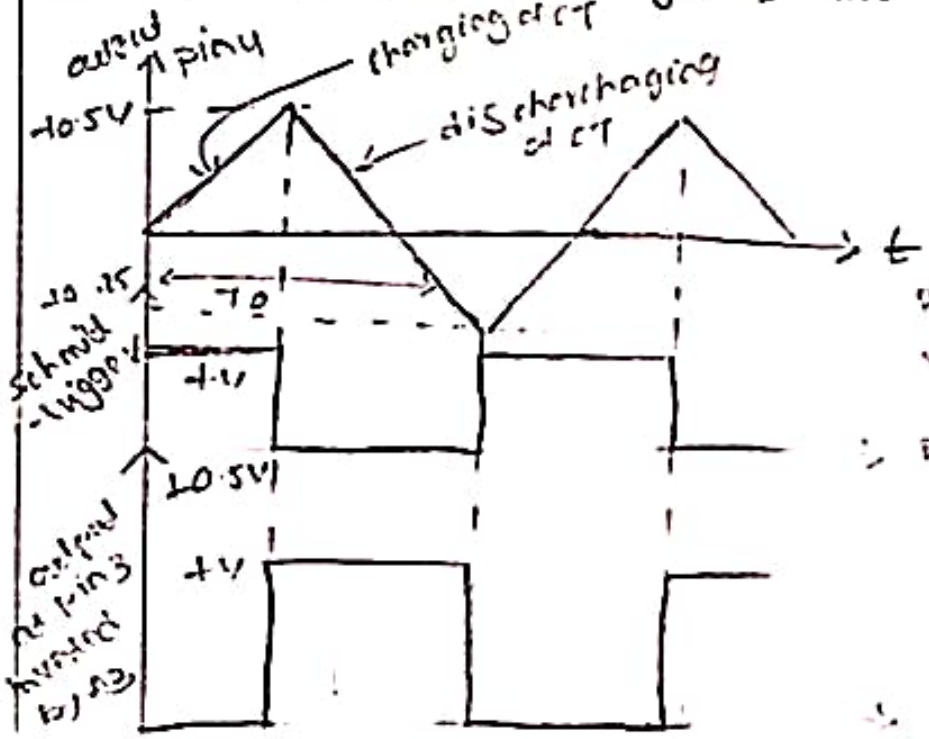

fig: wave form

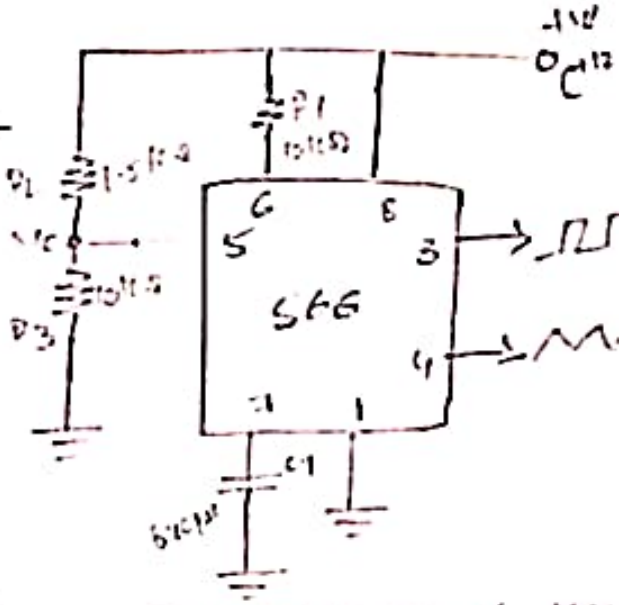

fig: connection of VCO unit

8) In figure when the voltage on the capacitor CT exceeds 0.5 Vcc during charging, the output of the schmitt trigger goes Low (0.5 Vcc).

9) The capacitor now discharges and when it is at 0.25 Vcc the output of Schmitt trigger goes HIGH (Vcc).

10) Since the source and sink currents are equal, capacitor charges and discharges for the same output of the Schmitt trigger is inverted by inverter by A3 and is available at pin 3

11) The output frequency of the VCO can be calculated as follows The total voltage on the capacitor changes from 0.25 Vcc to 0.5 Vcc Thus $\Delta V = 0.25 V_{cc}$. The capacitor charges with a constant current source

$$i_0 = \Delta V / \Delta t$$

(or)

$$\frac{0.25 V_{cc}}{\Delta t} = \frac{i}{C_T}$$

(or)

$$\Delta t = \frac{0.25 V_{cc} C_T}{i}$$

The total time period of the triangular waveform =

The frequency of oscillator f_0 is

$$f_0 = 1/T = 1/2\Delta t = \frac{i}{0.5 \times V_{cc} C_T}$$

But, $i = \frac{V_{cc} - V_c}{R_T}$

where V_c is the voltage at pins.

$$\therefore f_0 = \frac{2(V_{cc} - V_c)}{C_T R_T V_{cc}}$$

10. Explain Analog phase detector with neat wave forms

Phase Detector:-

The phase detection is the most important part of the PLL System. There are two types of phase detectors used, analog and digital.

Analog phase detector

→ The principle of analog phase detection is using switch type phase detector.

→ An electronic switch s is opened and closed by signal coming from VCO (normally a square wave)

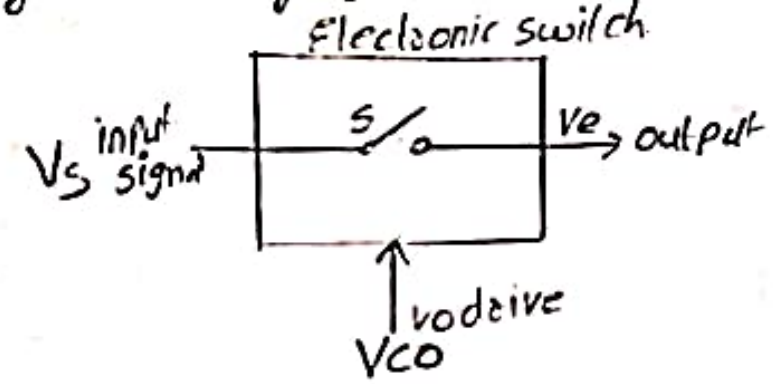

→ The input signal Vs assumed to be inphase ($\phi = 0°$) with VCO output Vo. Since the switch s is closed only when VCO output is positive, the output waveform Ve will be half sinusoids

→ similarly, the output waveform for $\phi = 90°$ and $\phi = 180°$ is shown in figure.

→ This type of phase detector is called a half wave detector, since the phase information for only one-half of the input waveform is detected and averaged.

→ The output of the phase comparator when filtered through a low pass filter gives an error signal which is the average value

of the output wave.

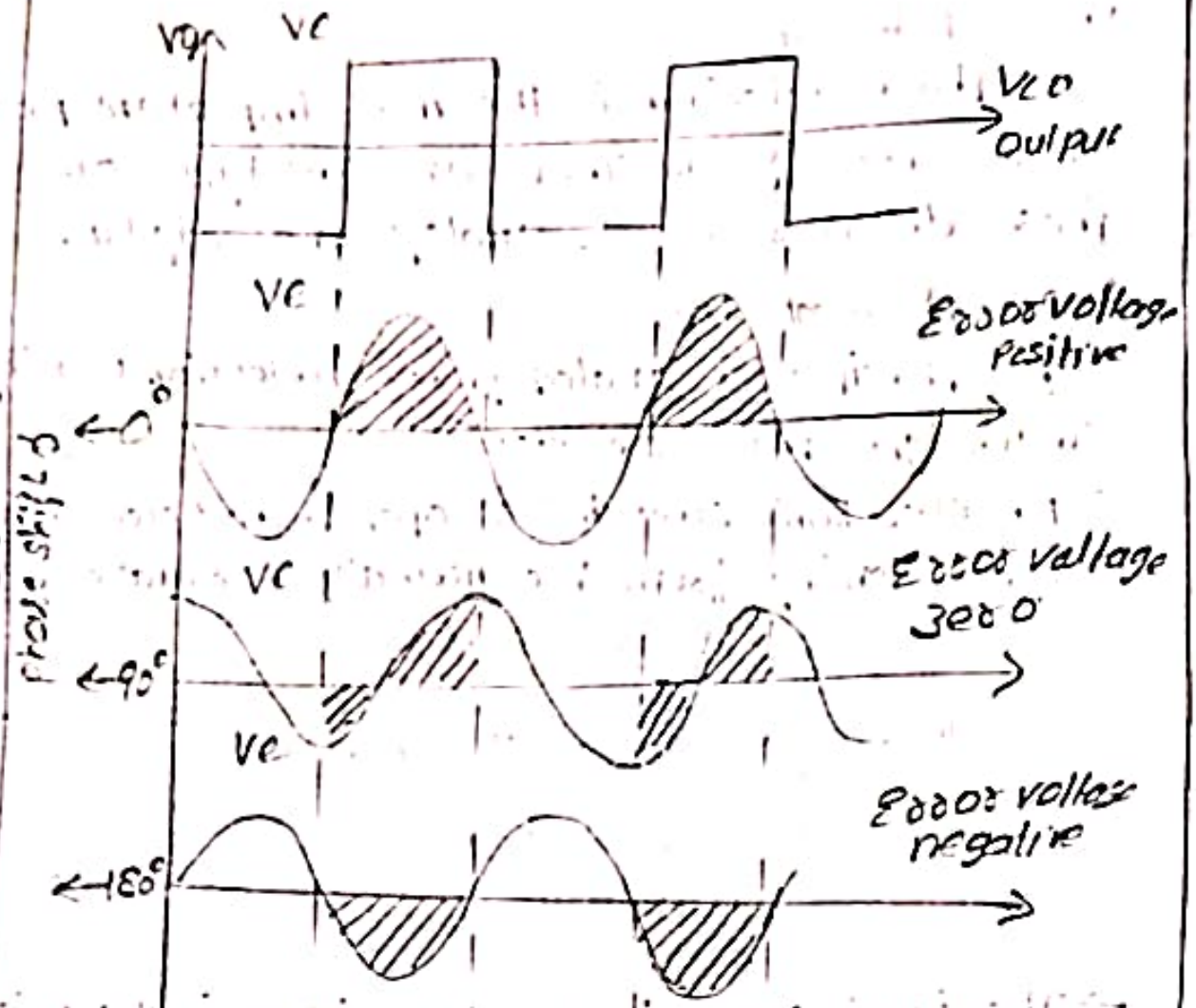

fig: I/P & O/P waveforms

→ It may be seen that the error voltage is zero when the phase shift between the two inputs is 90°. So, for perfect clock, the VCO output should be 90° out of phase with respect to the input signal.

Analysis:-

A phase comparator is basically a multiplier which multiplies the input signal

$V_s = V_s \sin 2\pi f_s t$ by the vco signal,

$$V_s = V_s \sin(2\pi f_o + \phi)$$

$$V_e = K V_s V_o \sin(2\pi f_s t) \sin(2\pi f_o t + \phi) \quad -①$$

Equation ① should be simplied as,

$$V_e = \frac{K V_s V_o}{2} [\cos(2\pi f_s t - 2\pi f_o - \phi) - \cos(2\pi f_s + 2\pi f_o t +$$

low pass filter should be $f_s - f_o$ not $f_s + f_o$

let $f_s = f_o$

$$V_o = \frac{K V_s V_o}{2} \cos(\phi)$$

11). Draw the block diagram of PLL IC 565 and explain.

A): Pin diagram:-

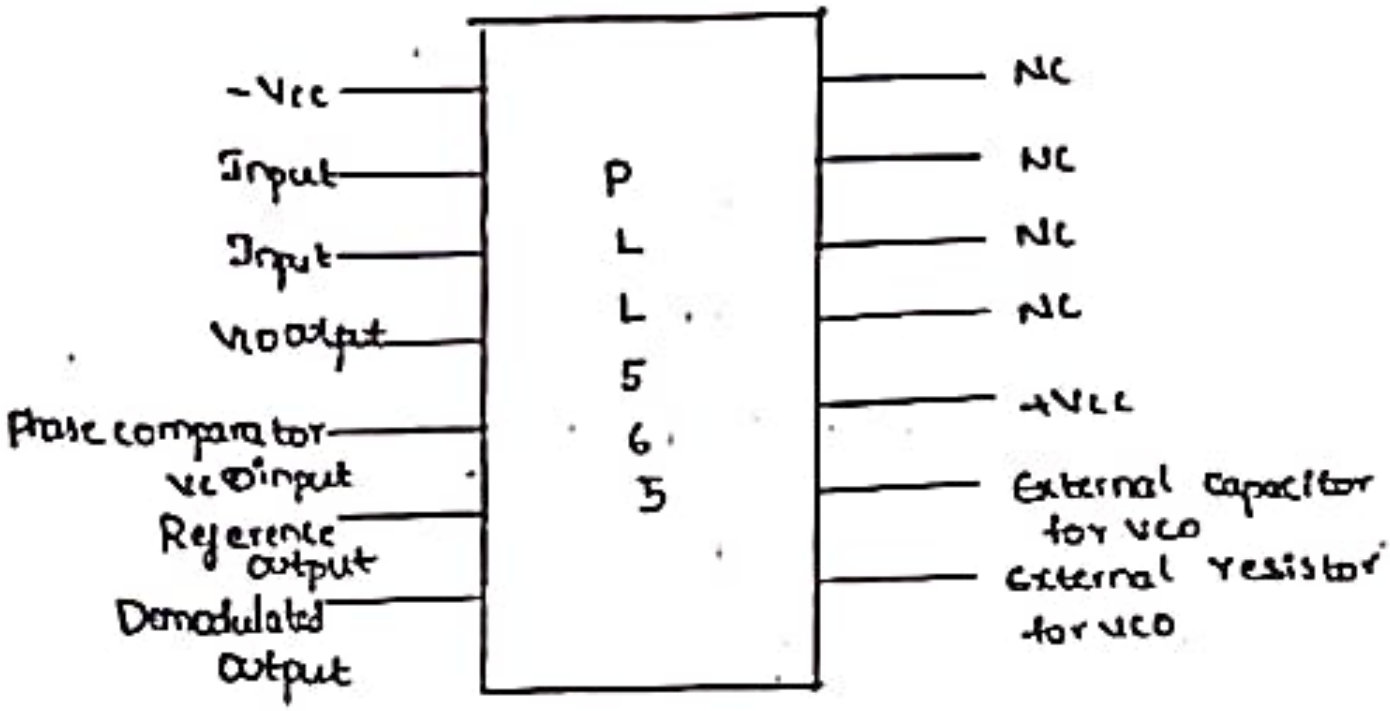

Block Diagram:-

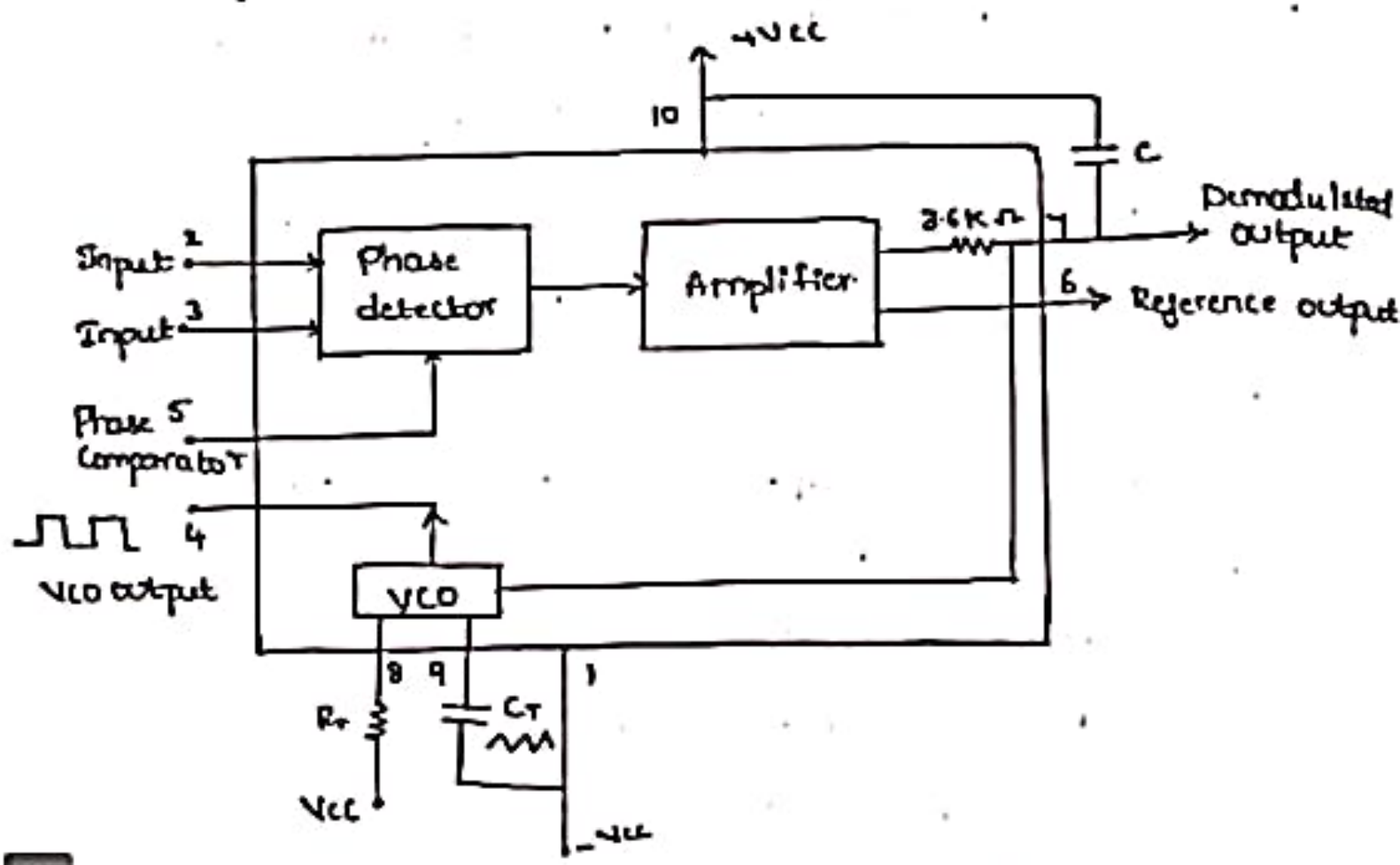

The block diagram of IC 565 PLL consists of phase detector, amplifier, low pass filter and VCO.

As shown the phase locked feedback loop is not internally connected.

Therefore, it is necessary to connect output of VCO to the phase comparator input externally.

In frequency multiplication applications a digital frequency divider is inserted into the loop i.e., between pin 4 & 5.

The centre frequency of the PLL is determined by the running frequency of the VCO and it is given as, $f_o = \frac{1.2}{4R_1C_1}$ Hz

where R_1 & C_1 are adjusted such that the free running frequency will be at the centre of the input frequency range.

The capacitor C_2 is connected between pin 7 and the +ve supply pin 10 from a first order LPF with internal resistance of 3.6kΩ

The value of filter capacitor C_2 should be large enough to eliminate possible oscillations in the VCO voltage.

The two inputs (pin 2 & 3) to the phase detector allows direct coupling of an input signal, provided that there is no dc voltage difference between the pins & the dc resistances seen from pins 2 & 3 are equal. The reference voltage may be used as comparator input in applications like FSK.

12) Draw the block diagram of phase locked loop (PLL) and briefly explain its principle.

A) Block Diagram of PLL:-

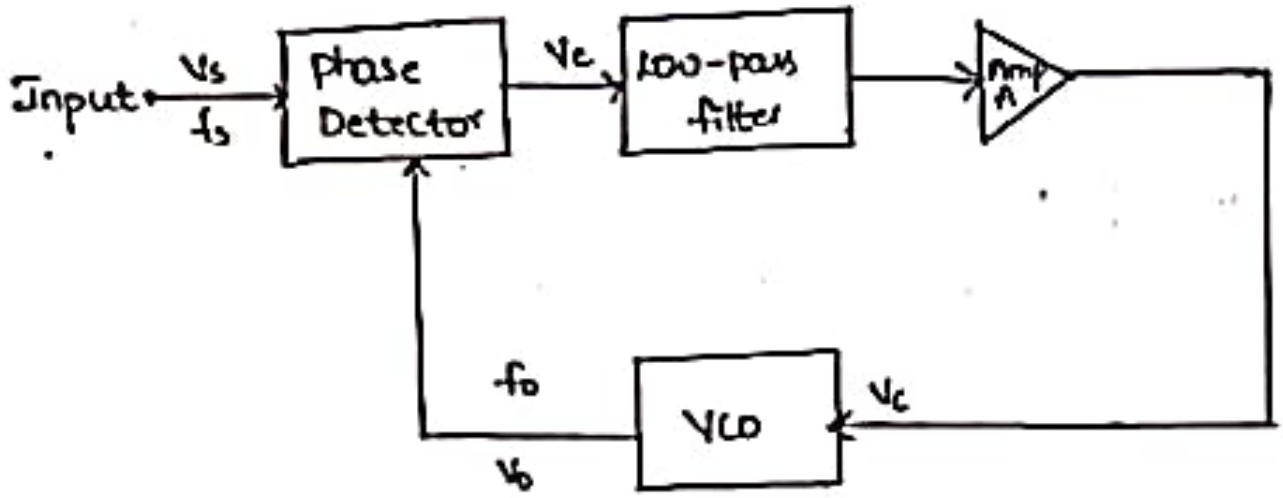

Basic principles:-

The feedback system consists of

1. phase detector/comparator
2. A low pass filter
3. An error amplifier
4. A voltage controlled oscillator

The VCO is a free running multivibrator and operates at a set frequency fo called free running frequency. The frequency deviation is directly proportional to the dc control voltage and hence it is called a "voltage controlled oscillator" (VCO).

If an input signal v_s of frequency f_s is applied to the PLL, the phase detector compares the phase and frequency of the incoming signal to that of the output v_o of the VCO. If the two signals differ in frequency and/or phase, an error voltage V_e is generated. The phase detector is basically a multiplier and produces the sum (f_s+f_o) and difference (f_s-f_o) components at its output. The high frequency component (f_s+f_o) is removed by the low pass filter and the difference frequency component is amplified and then applied as control voltage V_c to VCO. The VCO continues to change frequency till its output frequency is exactly the same as the input signal frequency. The circuit is then said to be locked. Once locked, PLL tracks the frequency changes of the input signal. Thus, a PLL goes through three stages i) free running
ii) capture
iii) locked or tracking.

Each successive cycle causes the VCO frequency to move closer to the input signal frequency. The difference in frequency becomes smaller and a larger dc component is passed by the filter, shifting the VCO frequency further.

The low pass filter controls the capture range. If VCO frequency is far away, the beat frequency will be too high to pass through the filter and the PLL will not respond. However, once locked, the filter no longer restricts the PLL. The VCO can track the signal, well beyond the capture range band. Thus tracking range is always larger than the capture range.